Type PC22 Load Cell

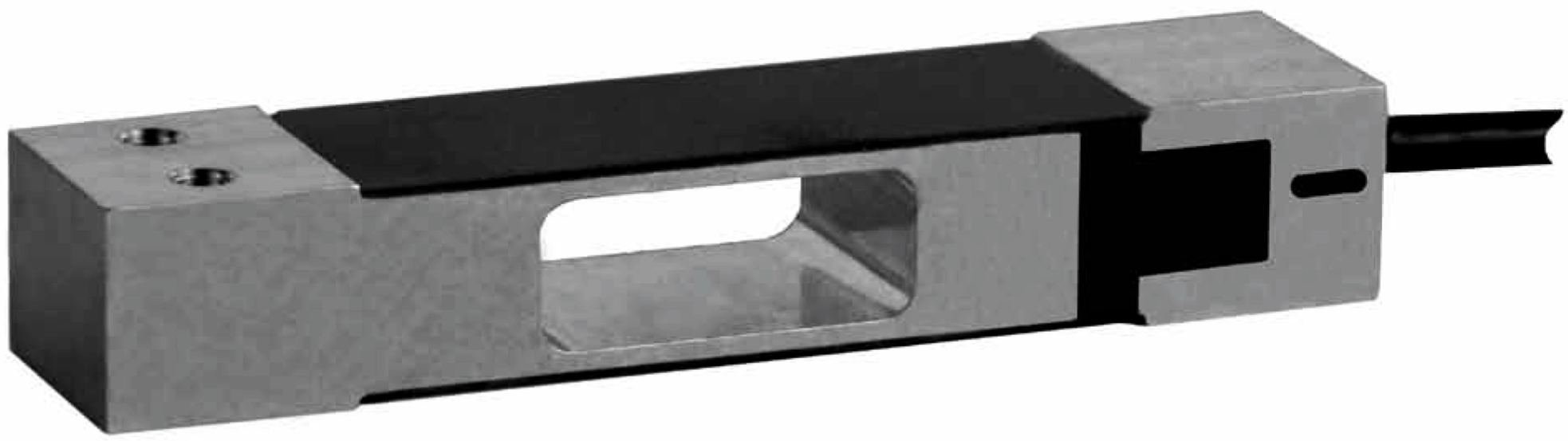

Product Description

The type PC22 is an aluminium single point load cell with an improved potting.

Application

- Retail scales and bench scales

Key Features

- Capacities from 5 kg to 40 kg
- Aluminium construction
- Environmental Protection IP67
- Low profile design
- Maximum platform size up to 350 x 350 mm

Approvals

- OIML approval to C3 (Y = 6 000)
- ATEX hazardous area approval for Zone 0, 1, 2, 20, 21 and 22
- FM hazardous area approval

Option

- Y = 12 000 for C3

Packed Weight

- 0.35 kg

Available Accessories

- Compatible range of electronics

A89-Rev7-GB-1(2)

No 4, Sahand St., Dr Beheshti St.,
Tehran, IRAN
Tel. +98(21)88 50 33 12 - 14
Fax. +98(21)88 76 49 51
WWW.FLINTEC.IR

Specifications

Maximum capacity	(E_{max})	kg	5 / 10 / 20 / 30 / 40	
Accuracy class according to OIML R60			(GP)	C3
Maximum number of verification intervals	(n_{LC})		n.a.	3 000
Minimum load cell verification interval	(v_{min})		n.a.	E_{max} /6 000
Temperature effect on minimum dead load output	(TC_0)	%*RO/10°C	± 0.0400	± 0.0233
Temperature effect on sensitivity	(TC_{RO})	%*RO/10°C	± 0.0200	± 0.0100
Combined error		%*RO	± 0.0500	± 0.0200
Non-linearity		%*RO	± 0.0400	± 0.0166
Hysteresis		%*RO	± 0.0400	± 0.0166
Creep error (30 minutes) / DR		%*RO	± 0.0600	± 0.0166
Option: Min. load cell verification interval	($v_{min\ opt}$)		n.a.	E_{max} /12 000
Option: Temp. effect on min. dead load output	($TC_{0\ opt}$)	%*RO/10°C	n.a.	± 0.0117
Rated Output	(RO)	mV/V	2 ± 10%	
Zero balance		%*RO	± 5	
Excitation voltage		V	5...15	
Input resistance	(R_{LC})	Ω	413 ± 20	
Output resistance	(R_{out})	Ω	350 ± 25	
Insulation resistance (100 V DC)		MΩ	≥ 5 000	
Safe load limit	(E_{lim})	%*E_{max}	150	
Ultimate load		%*E_{max}	300	
Safe side load		%*E_{max}	100	
Maximum platform size; loading acc. to OIML R76		mm	350 x 350	
Maximum off centre distance at maximum capacity		mm	115	
Compensated temperature range		°C	–10...+40	
Operating temperature range		°C	–20...+65 (ATEX –20...+60)	
Load cell material			aluminium	
Sealing			potted	
Protection according EN 60 529			IP67	

The limits for Non-Linearity, Hysteresis, and TC_{RO} are typical values.
The sum of Non-linearity, Hysteresis and TC_{RO} meets the requirements according to OIML R60 with p_{LC}=0.7..

Dimensions (in mm)

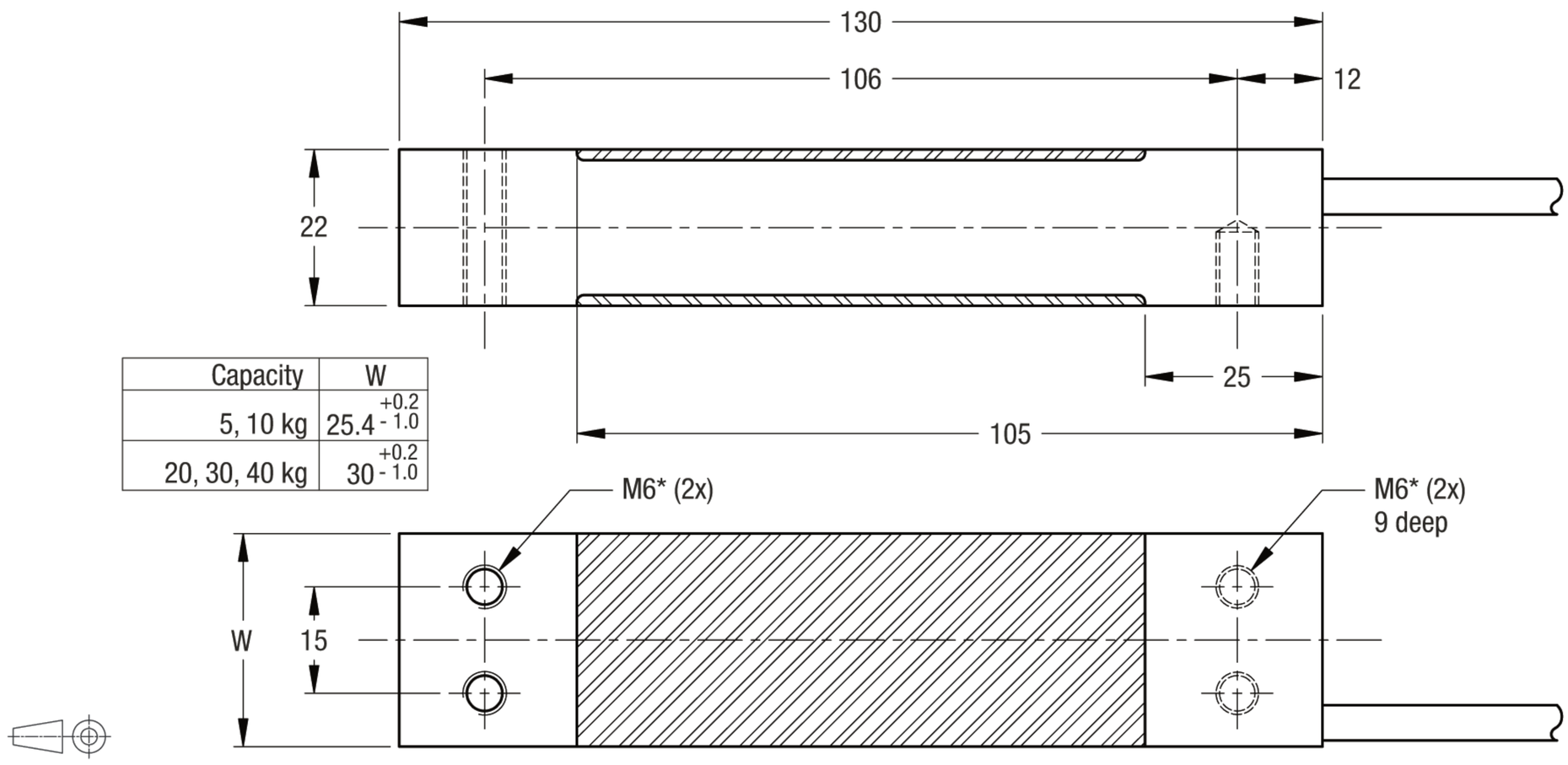

Capacity	W
5, 10 kg	$25.4^{+0.2}_{-1.0}$
20, 30, 40 kg	$30^{+0.2}_{-1.0}$

Mounting bolts M6 8.8; torque 10 Nm. Torque value assumes oiled threads.
* Unified thread 1/4-20 UNC is available.

Wiring

- The load cell is provided with a shielded, 6 conductor cable (AWG 26). Cable jacket polyurethane
- Cable length: 2 m
- Cable diameter: 5 mm
- The shield is connected to the load cell body

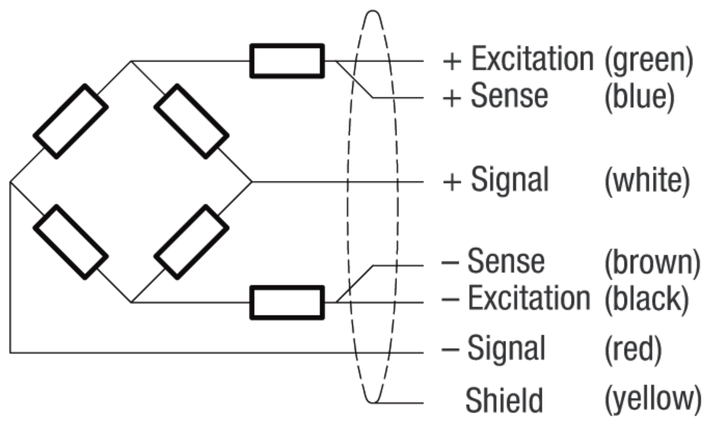

A89-Rev7-GB-2(2) Specifications and dimensions are subject to change without notice.

No 4, Sahand St., Dr Beheshti St.,
Tehran, IRAN
Tel. +98(21)88 50 33 12 - 14
Fax. +98(21)88 76 49 51
WWW.FLINTEC.IR